FEMALE END VIEW

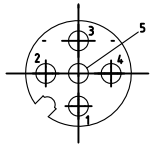

1=BN
2=WH
3=BU
4=BK
5=GN/YE

SUGGESTED PANEL CUT OUT

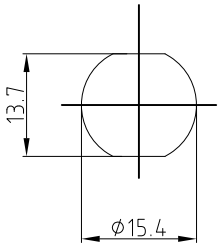

SPECIFICATIONS

CONTANCT CARRIER MATERIAL/COLOR	TPU/BLACK
CONTACT/PLATING	BRASS/GOLD
HOUSING MATERIAL/PLATING	BRASS/NICKEL
O-RING MATERIAL	FKM/NBR
OPERATING CURRENT	4 A
OPERATING VOLTAGE	250 V
CONDUCTOR INSULATION MATERIAL	PVC
NUMBER OF CONDUCTORS (AWG)	4 x 22+1x20 AWG
OPERATING TEMPERATURE	-20°C — +85°C
PROTECTION CLASS	IEC IP67

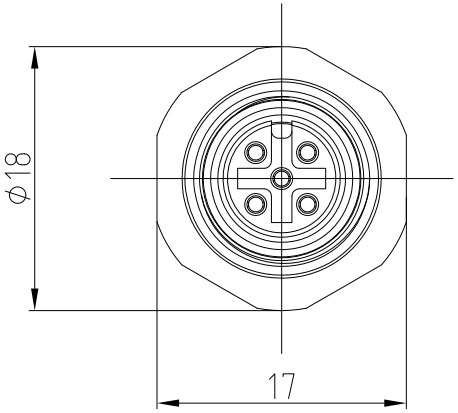

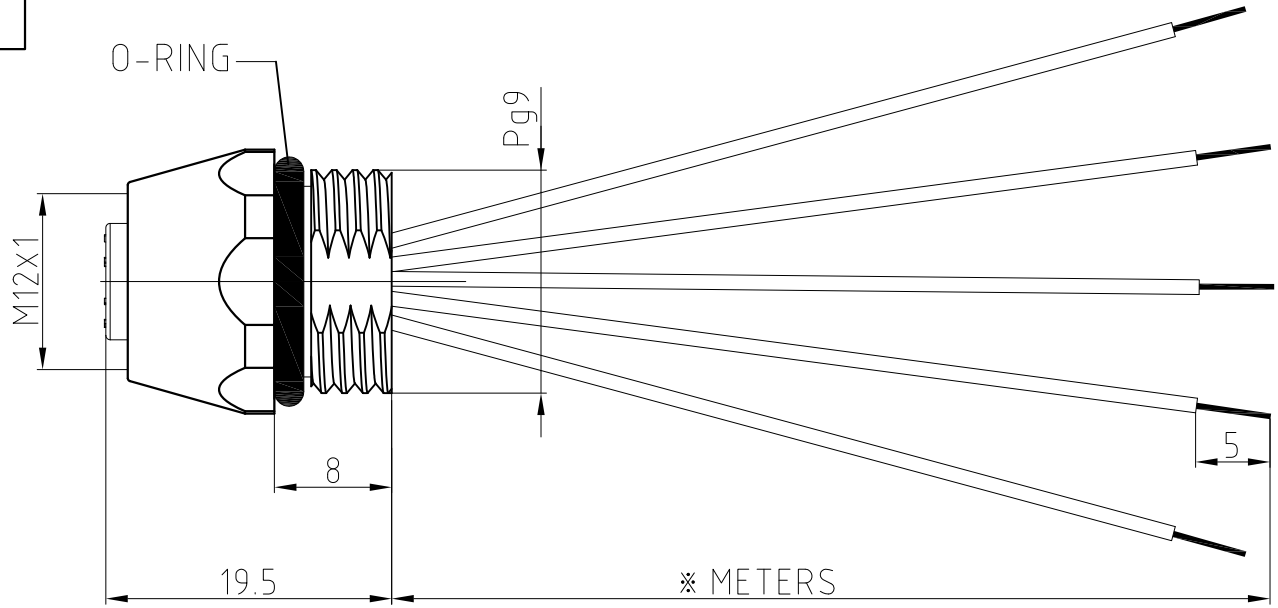

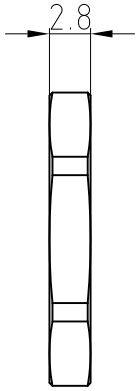

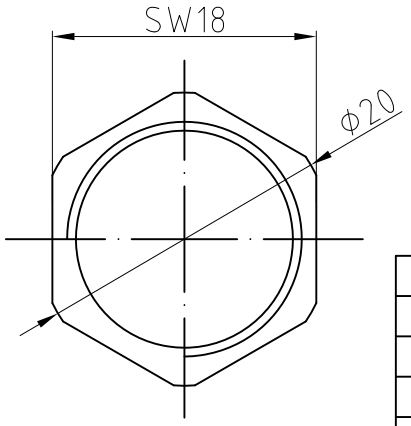

CABLE LENGTH	TOLERANCE
ALL LENGTHS	+4%(OR 50mm) OF LENGTH -0% (OR 0mm) OF LENGTH WHICHEVER IS GREATER
STRIP LENGTH	**TOLERANCE**
0 - 7mm	± 1.0mm
8 - 29mm	± 1.5mm
30 - 49mm	± 2.0mm
50 - 69mm	± 3.0mm
70 - 100mm	± 4.0mm
over 100mm	± 5.0mm

REV	COUNT	DESCRIPTION OF REVISIONS	BY	CHECKED	DATE

UNIT OF MEASUREMENT
MILLIMETER

GSEE TECH
Tianjin Geneuo Technology Co.,Ltd

Approved:
Date:

Date: 2018.4.27

Description:
FEK521-※

Process:YJ F
Date:2018.5.24

Scale: 1:1

Checked:WY
Date:2018.5.3

Designed:LXH
Date:2018.4.27

3RD Angle Projection

www.gsee-tech.cn
www.gsee-tech.com

SOURCE DRAWING-FOR REFERENCE ONLY

REV
A